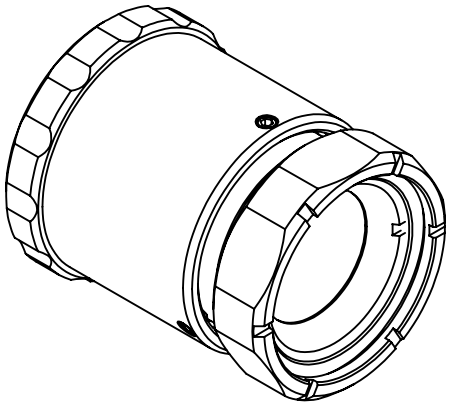

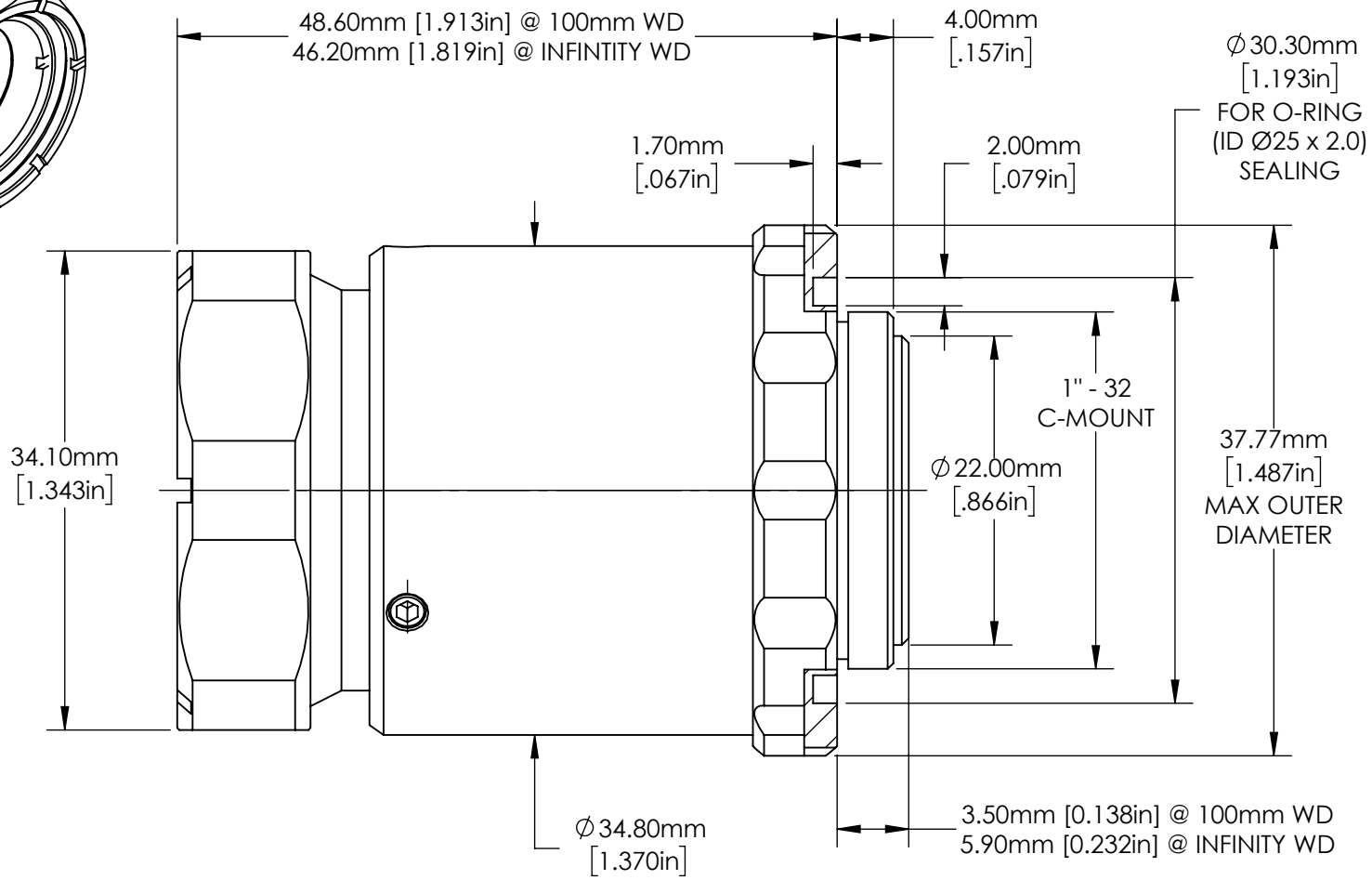

FOR INFORMATION ONLY:
DO NOT MANUFACTURE PARTS TO THIS DRAWING

SPECIFICATIONS SUBJECT TO CHANGE WITHOUT NOTICE
DIMENSIONS ARE FOR REFERENCE ONLY

Edmund Optics®

THIRD ANGLE PROJECTION		TITLE	16mm, f/8 Cw SERIES FIXED FOCAL LENGTH LENS	
ALL DIMS IN	mm	DWG NO	15643	SHEET 1 OF 1