PART	PART #	MATERIAL
1	#46-420	SCHOTT WG320
2	#56-353	BLACK ANODIZED ALUMINUM

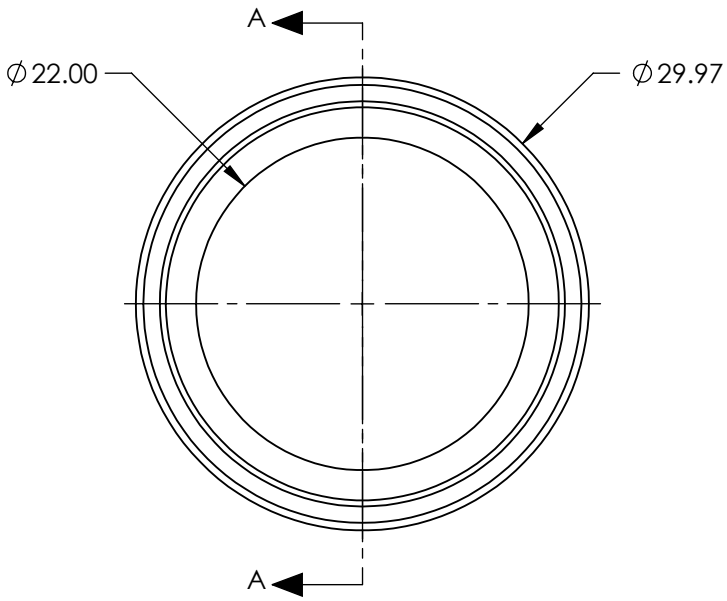

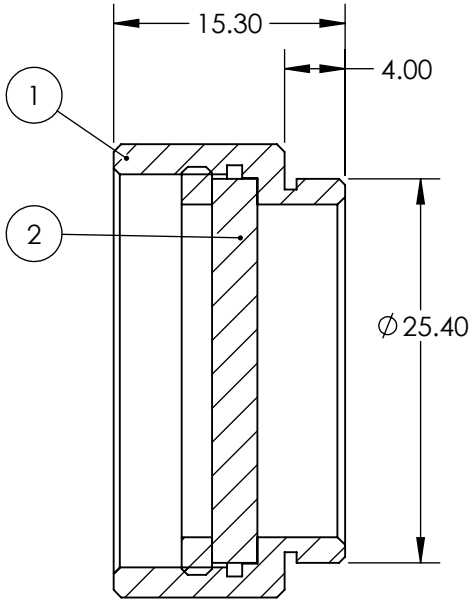

SECTION A-A

FOR INFORMATION ONLY:
DO NOT MANUFACTURE PARTS TO THIS DRAWING

SPECIFICATIONS SUBJECT TO CHANGE WITHOUT NOTICE
DIMENSIONS ARE FOR REFERENCE ONLY

SHAPE	PLANO
SPECTRAL TRANSMITTANCE (%)	99
PASSBAND LIMIT 1 (nm)	470
CUT-OFF POSITION (nm)	320±6
STOPBAND LIMIT (nm)	280
WAVELENGTH	UV

Edmund Optics®

THIRD ANGLE PROJECTION

TITLE: 22mm CA, SCHOTT N-WG320, C-Mount Longpass Glass Color Filter

ALL DIMS IN mm

DWG NO: 13026

SHEET 1 OF 1