PART	PART #	MATERIAL
1	#54-662	SCHOTT RG780
2	#55-246	BLACK ANODIZED ALUMINUM

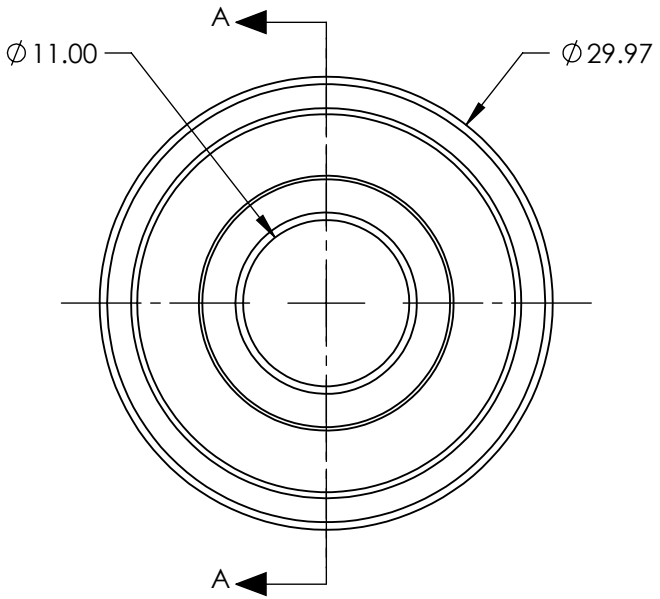

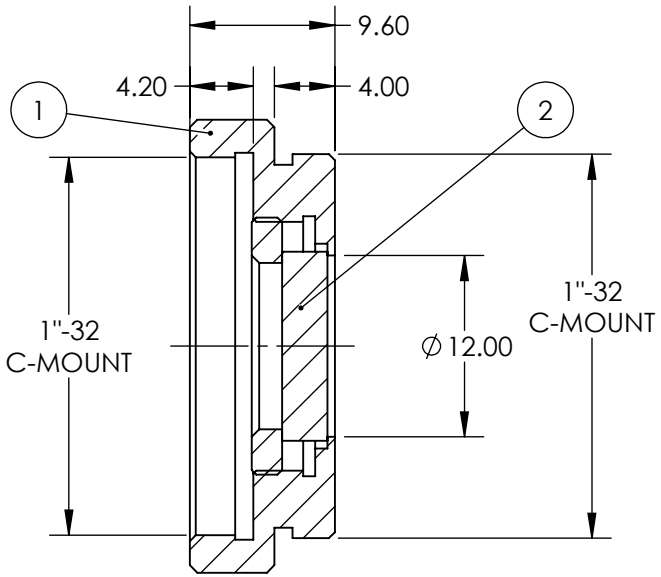

SECTION A-A

FOR INFORMATION ONLY:
DO NOT MANUFACTURE PARTS TO THIS DRAWING

SPECIFICATIONS SUBJECT TO CHANGE WITHOUT NOTICE
DIMENSIONS ARE FOR REFERENCE ONLY

SHAPE	PLANO
SPECTRAL TRANSMITTANCE (%)	97
PASSBAND LIMIT 1 (nm)	900
CUT-OFF POSITION (nm)	780±9
STOPBAND LIMIT (nm)	610
WAVELENGTH	IR

Edmund Optics®

THIRD ANGLE PROJECTION

ALL DIMS IN mm

TITLE: 12mm CA, SCHOTT RG780, C-Mount Longpass Glass Color Filter

DWG NO: 12953

SHEET 1 OF 1