NOTES:

1. MATERIAL: STAINLESS STEEL AND BLACK ANODIZED ALUMINUM
2. MAX TRAVEL ANGLE: 360°
3. RoHS: EXEMPT

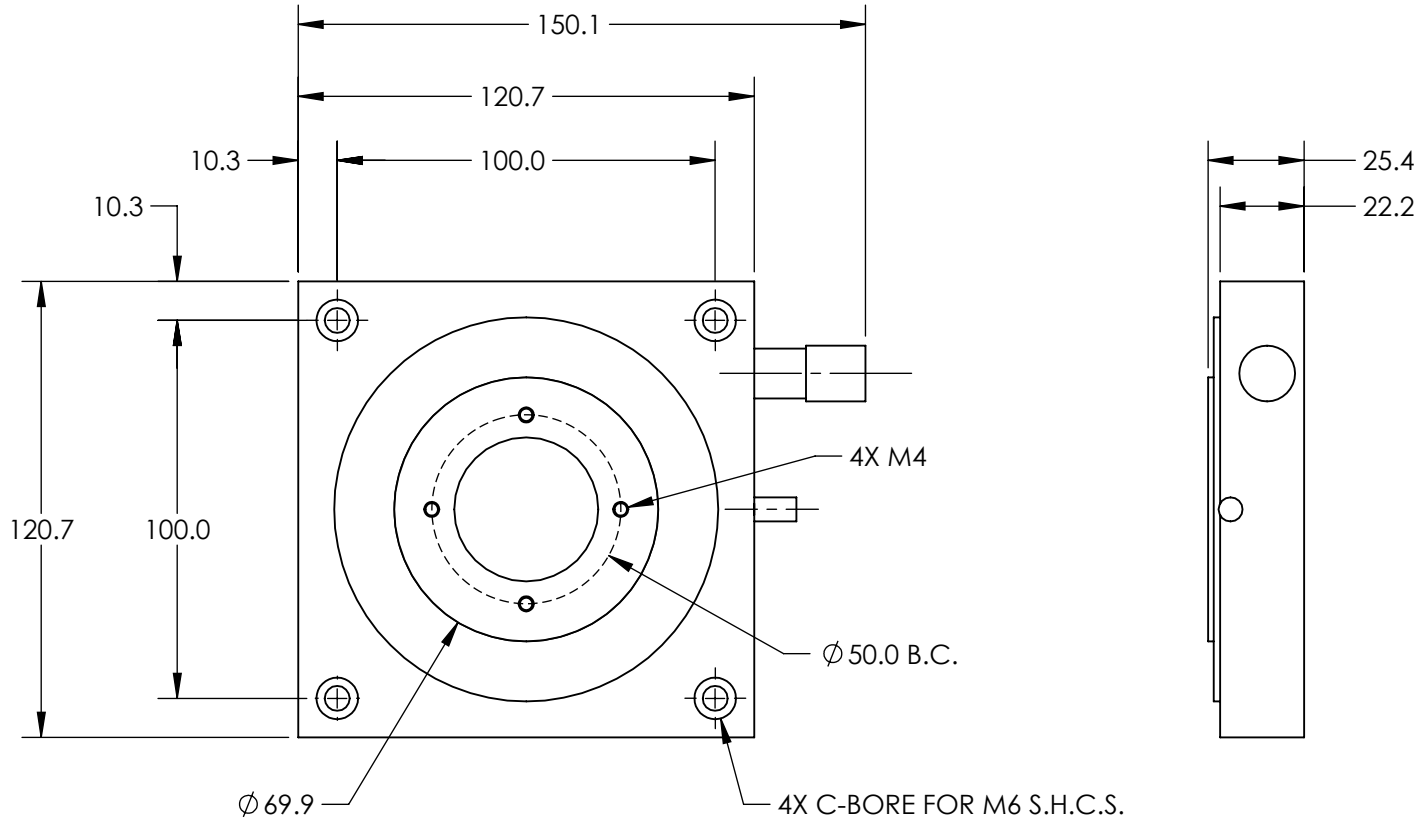

SPECIFICATIONS SUBJECT TO CHANGE WITHOUT NOTICE
DIMENSIONS ARE FOR REFERENCE ONLY

FOR INFORMATION ONLY:
DO NOT MANUFACTURE PARTS TO THIS DRAWING

			Edmund Optics®	
THIRD ANGLE PROJECTION		TITLE	2.75" Metric Heavy Duty Rotary Stage	
ALL DIMS IN	mm	DWG NO	13773	SHEET 1 OF 1