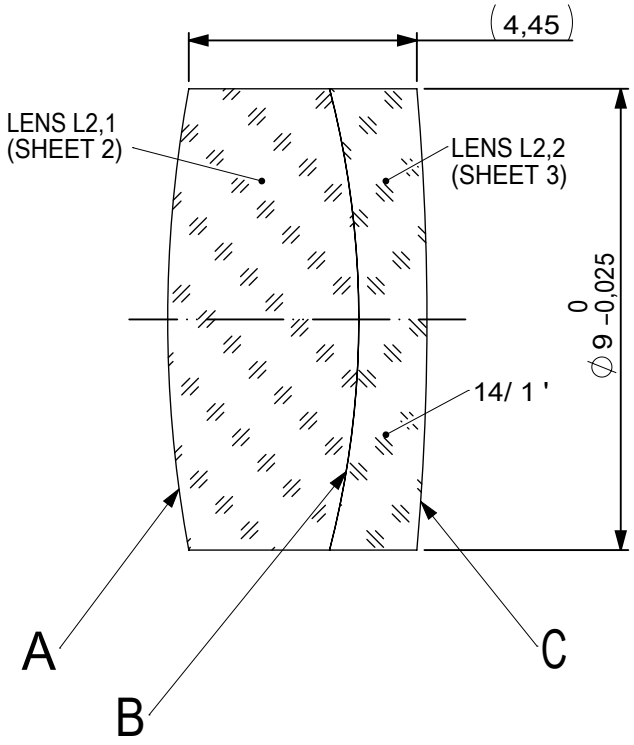

FOCAL LENGTH (EFL): 40 ±0,4

BACK FOCAL LENGTH (BFL): 37,54

SURFACE A	SURFACE B	SURFACE C
Øe 8,1	Øe 8,1 CEMENT: NOA 61 OR EQUIVALENT	Øe 8,1

PROTECTIVE CHAMFERS AS NEEDED		FIRST ANGLE PROJECTION	Edmund Optics®
ROHS: COMPLIANT	SCALE: NONE	λ = 587,6nm	
SPECIFICATIONS SUBJECT TO CHANGE WITHOUT NOTICE. DIMENSIONS ARE FOR REFERENCE ONLY			TITLE: 9mm Dia, x 40mm FL, MgF2 Coated, Achromatic Doublet Lens
FOR INFORMATION ONLY: DO NOT MANUFACTURE PARTS TO THIS DRAWING		ALL DIMS IN: mm	
INDICATIONS IN ACCORDANCE WITH ISO 10110			DWG NO: 45818 · SHEET SIZE: A4 · SHEET 1 OF 3

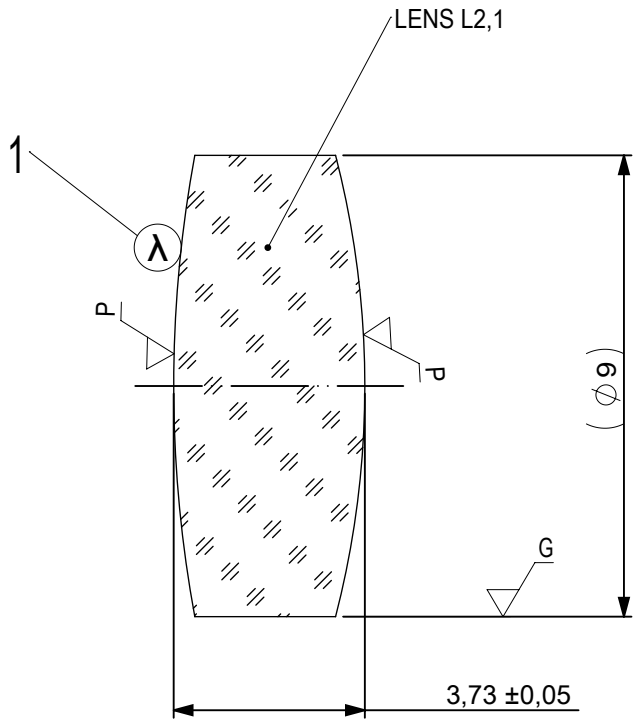

1 AR COATING:

¼ WAVE MgF2 @ 550nm
R(AVG) < 1,75% FROM 400-700nm (N-BK7)

LEFT SURFACE	MATERIAL	RIGHT SURFACE
R 24,77±0,025 CX	GLASS N-BK7 517/642	R 18,01±0,018 CX
Øe 8,1		Øe 8,1
3/ 3 (0,5) λ=632,8 nm		3/ 3 (0,5) λ=632,8 nm
4/ -		4/ -
5/ 40 - 20 (MIL-PRF-13830B)		5/ 40 - 20 (MIL-PRF-13830B)
6/ -		6/ -

PROTECTIVE CHAMFERS AS NEEDED		FIRST ANGLE PROJECTION	Edmund Optics®
ROHS: COMPLIANT	SCALE: NONE	λ = 587,6nm	
SPECIFICATIONS SUBJECT TO CHANGE WITHOUT NOTICE. DIMENSIONS ARE FOR REFERENCE ONLY			TITLE: 9mm Dia, x 40mm FL, MgF2 Coated, Achromatic Doublet Lens
FOR INFORMATION ONLY: DO NOT MANUFACTURE PARTS TO THIS DRAWING		ALL DIMS IN: mm	
INDICATIONS IN ACCORDANCE WITH ISO 10110			DWG NO: 45818 · SHEET SIZE: A4 · SHEET 2 OF 3

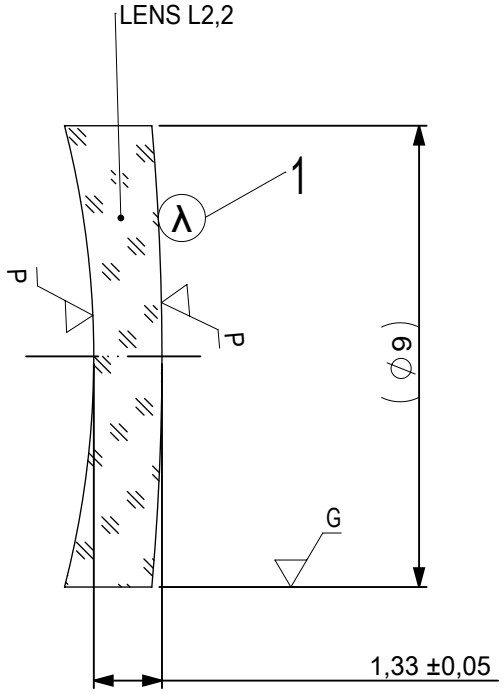

1 AR COATING:

¼ WAVE MgF2 @ 550nm
R(AVG) < 1,75% FROM 400-700nm (N-BK7)

LEFT SURFACE	MATERIAL	RIGHT SURFACE
R 18,01±0,018 CV	GLASS N-SF5 673/322	R 51,17±0,051 CX
Øe 8,1		Øe 8,1
3/ 3 (0,5) λ=632,8 nm		3/ 3 (0,5) λ=632,8 nm
4/ -		4/ -
5/ 40 - 20 (MIL-PRF-13830B)		5/ 40 - 20 (MIL-PRF-13830B)
6/ -		6/ -

PROTECTIVE CHAMFERS AS NEEDED		FIRST ANGLE PROJECTION	Edmund Optics®	
ROHS: COMPLIANT	SCALE: NONE	λ = 587,6nm		
SPECIFICATIONS SUBJECT TO CHANGE WITHOUT NOTICE. DIMENSIONS ARE FOR REFERENCE ONLY			TITLE	9mm Dia, x 40mm FL, MgF2 Coated, Achromatic Doublet Lens
FOR INFORMATION ONLY: DO NOT MANUFACTURE PARTS TO THIS DRAWING		ALL DIMS IN: mm		
INDICATIONS IN ACCORDANCE WITH ISO 10110			DWG NO 45818	SHEET SIZE A4 / SHEET 3 OF 3