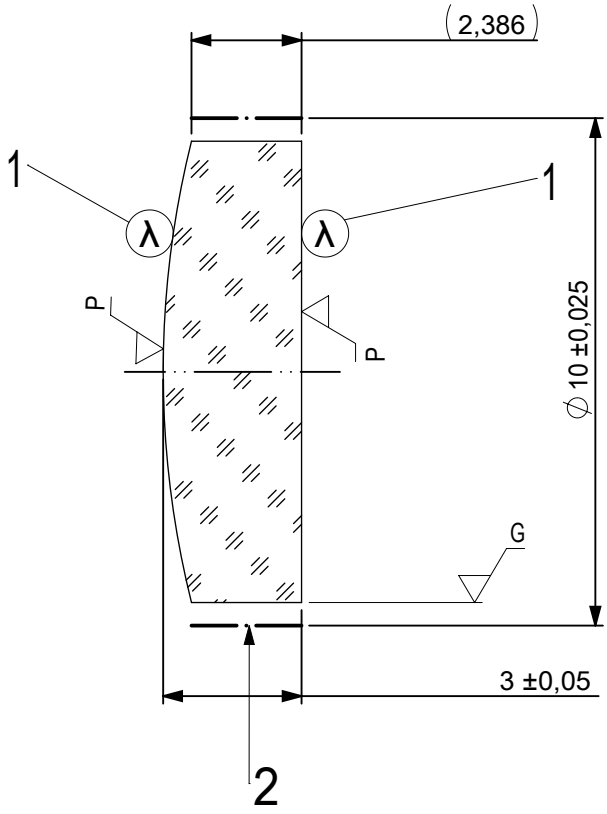

FOCAL LENGTH (EFL): 40 ±0,4

BACK FOCAL LENGTH (BFL): 38,02

1 AR COATING: YAG-BBAR
R(ABS) < 0,25% @ 532nm @ 0° AOI
R(ABS) < 0,25% @ 1064nm @ 0° AOI
R(AVG) < 1,0% FROM 500-1100nm @ 0° AOI

2 BLACKENED SURFACE

LEFT SURFACE	MATERIAL	RIGHT SURFACE
R 20,67±0,021 CX	GLASS N-BK7 517/642	R ∞ PL
Øe 9		Øe 9
3/ 3 (0,5) λ=632,8 nm		3/ 3 (0,5) λ=632,8 nm
4/ -		4/ 1,93'
5/ 40 - 20 (MIL-PRF-13830B)		5/ 40 - 20 (MIL-PRF-13830B)
6/ -		6/ -

PROTECTIVE CHAMFERS AS NEEDED

ROHS: COMPLIANT | SCALE: NONE | λ = 587,6nm

SPECIFICATIONS SUBJECT TO CHANGE WITHOUT NOTICE. DIMENSIONS ARE FOR REFERENCE ONLY

FOR INFORMATION ONLY: DO NOT MANUFACTURE PARTS TO THIS DRAWING

INDICATIONS IN ACCORDANCE WITH ISO 10110

FIRST ANGLE PROJECTION

ALL DIMS IN: mm

Edmund Optics®

TITLE: 10,0mm Dia, x 40,0mm FL, YAG-BBAR, Inked, Plano-Convex Lens

DWG NO: 88826INK

SHEET SIZE: A4

SHEET 1 OF 1