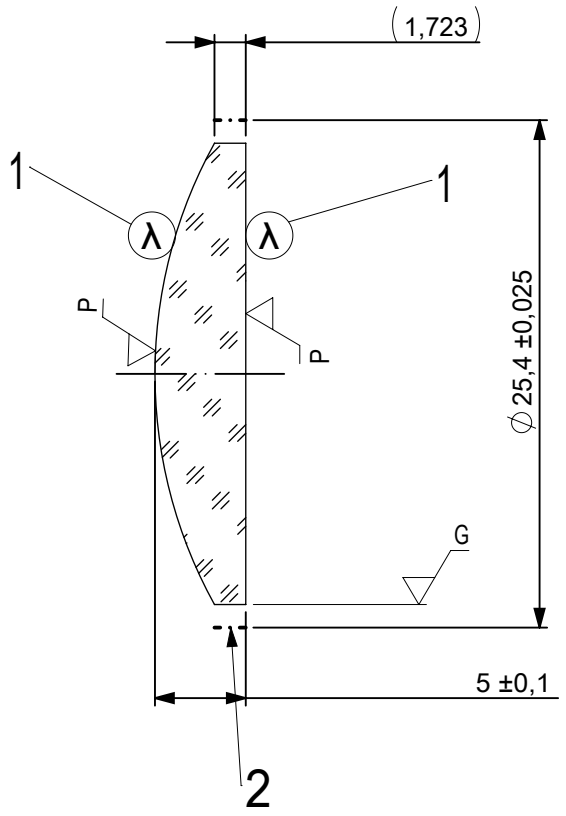

FOCAL LENGTH (EFL): 50,8 ±0,51

BACK FOCAL LENGTH (BFL): 47,5

1 AR COATING: NIR I
R(AVG) ≤ 0,5% FROM 600-1050nm @ 0° AOI

2 BLACKENED SURFACE

LEFT SURFACE	MATERIAL	RIGHT SURFACE
R 26,25±0,026 CX	GLASS N-BK7 517/642	R ∞ PL
Øe 24,4		Øe 24,4
3/ 3 (0,5) λ=632,8 nm		3/ 3 (0,5) λ=632,8 nm
4/ -		4/ 1,93'
5/ 40 - 20 (MIL-PRF-13830B)		5/ 40 - 20 (MIL-PRF-13830B)
6/ -		6/ -

PROTECTIVE CHAMFERS AS NEEDED	FIRST ANGLE PROJECTION	Edmund Optics®
ROHS: COMPLIANT / SCALE: NONE / λ = 587,6nm		
SPECIFICATIONS SUBJECT TO CHANGE WITHOUT NOTICE. DIMENSIONS ARE FOR REFERENCE ONLY		TITLE: 25,4mm Dia, x 50,8mm FL, NIR I, Inked, Plano-Convex Lens
FOR INFORMATION ONLY: DO NOT MANUFACTURE PARTS TO THIS DRAWING	ALL DIMS IN: mm	
INDICATIONS IN ACCORDANCE WITH ISO 10110		DWG NO: 62586INK / SHEET SIZE: A4 / SHEET 1 OF 1