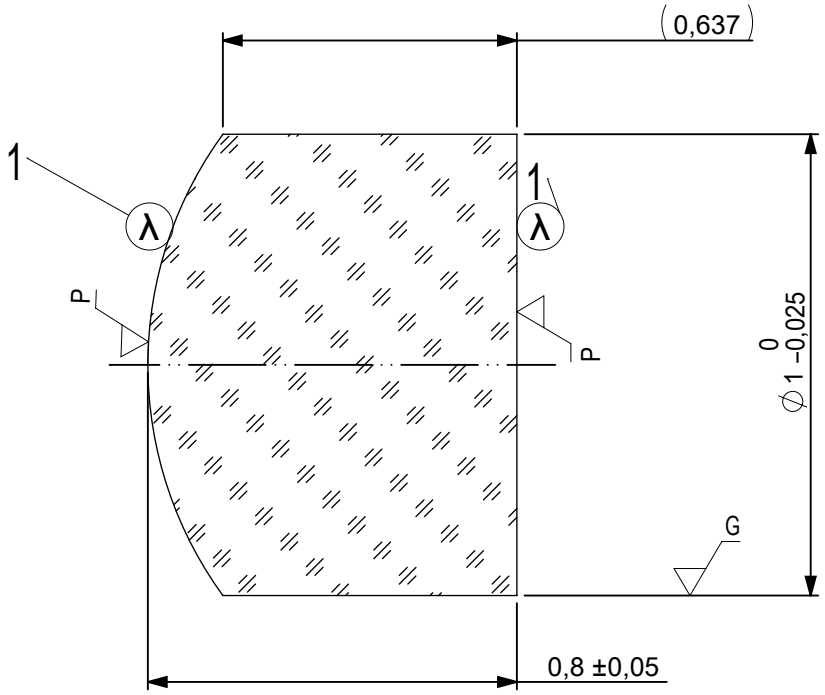

FOCAL LENGTH (EFL): 1 ±0,01

BACK FOCAL LENGTH (BFL): 0,57

1 AR COATING: YAG-BBAR
R(ABS) < 0,25% @ 532nm @ 0° AOI
R(ABS) < 0,25% @ 1064nm @ 0° AOI
R(AVG) < 1,0% FROM 500-1100nm @ 0° AOI

LEFT SURFACE	MATERIAL	RIGHT SURFACE
R 0,85±0,001 CX	GLASS N-LaSF9 850/322	R ∞ PL
Øe 0,5		Øe 0,5
3/ 3 (0,5) λ=632,8 nm		3/ 3 (0,5) λ=632,8 nm
4/ -		4/ 52,94'
5/ 20 - 10 (MIL-PRF-13830B)		5/ 20 - 10 (MIL-PRF-13830B)
6/ -		6/ -

PROTECTIVE CHAMFERS AS NEEDED		FIRST ANGLE PROJECTION	Edmund Optics®	
ROHS: COMPLIANT	SCALE: NONE	λ = 587,6nm		
SPECIFICATIONS SUBJECT TO CHANGE WITHOUT NOTICE. DIMENSIONS ARE FOR REFERENCE ONLY			TITLE	1mm Dia x 1mm FL, YAG-BBAR Coated, Plano-Convex Lens
FOR INFORMATION ONLY: DO NOT MANUFACTURE PARTS TO THIS DRAWING		ALL DIMS IN: mm		
INDICATIONS IN ACCORDANCE WITH ISO 10110			DWG NO 35711	SHEET SIZE A4 / SHEET 1 OF 1