NOTES:
1. MATERIAL: STAINLESS STEEL AND BLACK ANODIZED ALUMIUM
2. MAX TRAVEL ANGLE: 360°
3. RoHS: EXEMPT

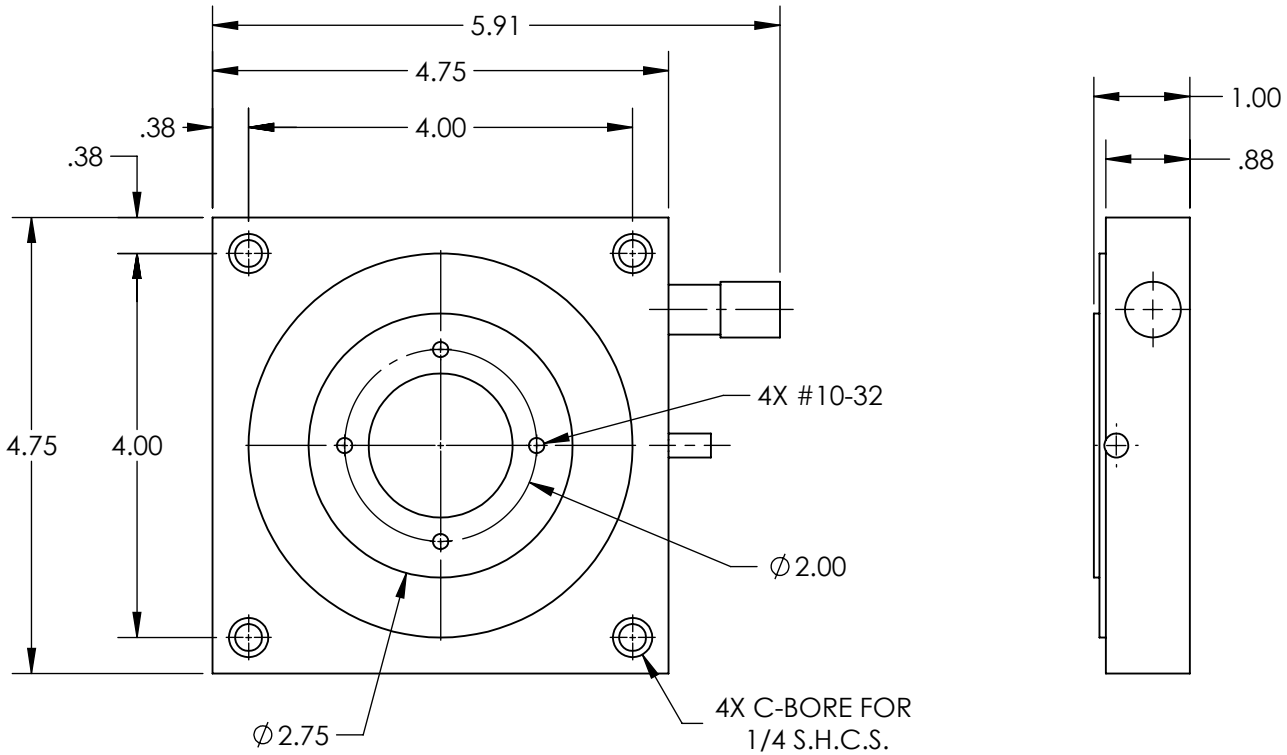


SPECIFICATIONS SUBJECT TO CHANGE WITHOUT NOTICE
DIMENSIONS ARE FOR REFERENCE ONLY

**FOR INFORMATION ONLY:**
**DO NOT MANUFACTURE PARTS TO THIS DRAWING**

Edmund Optics®

| | | | | |
|---|---|---|---|---|
| THIRD ANGLE PROJECTION | | TITLE | 2.75" STAGE DIAMETER, WEIGHT 2.0lbs, HEAVY LOAD STAGE | |
| ALL DIMS IN | in | DWG NO | 38195 | SHEET 1 OF 1 |