NOTES:

1. SUBSTRATE:
   N-BK7
2. S2 TO BE PARALLEL TO S1 TO WITHIN <3 ARCMINS
3. COATING (APPLY ACROSS COATING APERTURE)
   S1 & S2: R(ABS) < 0.25% @ 532nm @ 0° AOI

   DAMAGE THRESHOLD
   PULSED: 10J/cm² @ 20ns, 20Hz @ 532nm

4. FINE GROUND SURFACE
5. CLEAR APERTURE AND COATING APERTURE ARE CENTERED ON SURFACE
6. POWER, IRREGULARITY, AND SURFACE QUALITY SPECIFICATIONS APPLY ACROSS CLEAR APERTURE
7. ROHS COMPLIANT

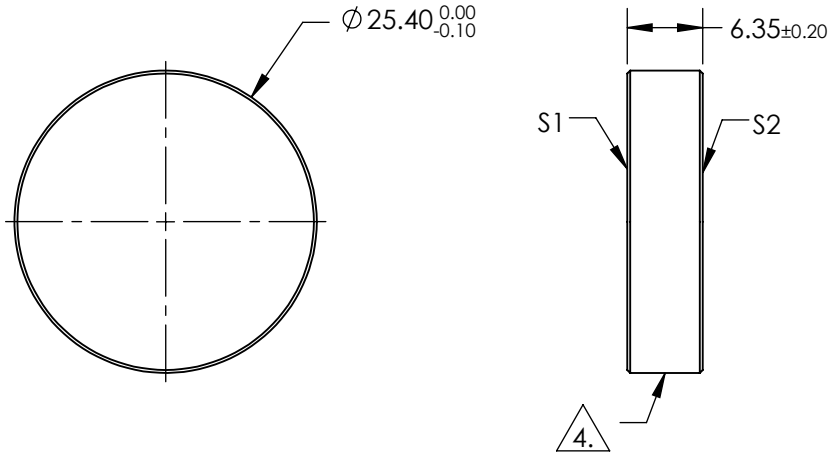

FOR INFORMATION ONLY:
DO NOT MANUFACTURE PARTS TO THIS DRAWING

SPECIFICATIONS SUBJECT TO CHANGE WITHOUT NOTICE
DIMENSIONS ARE FOR REFERENCE ONLY

	S1	S2
SHAPE	PLANO	PLANO
SURFACE QUALITY	10-5	10-5
SURFACE FLATNESS	λ /10	λ /10
MIN CLEAR APERTURE	Ø22.86	Ø22.86
BEVEL	PROTECTIVE AS NEEDED	PROTECTIVE AS NEEDED

Edmund Optics®

THIRD ANGLE PROJECTION		TITLE	Ø25.4mm x 6.35mm 532nm N-BK7 LASER WINDOW	
ALL DIMS IN	mm	DWG NO	38963	SHEET 1 OF 1