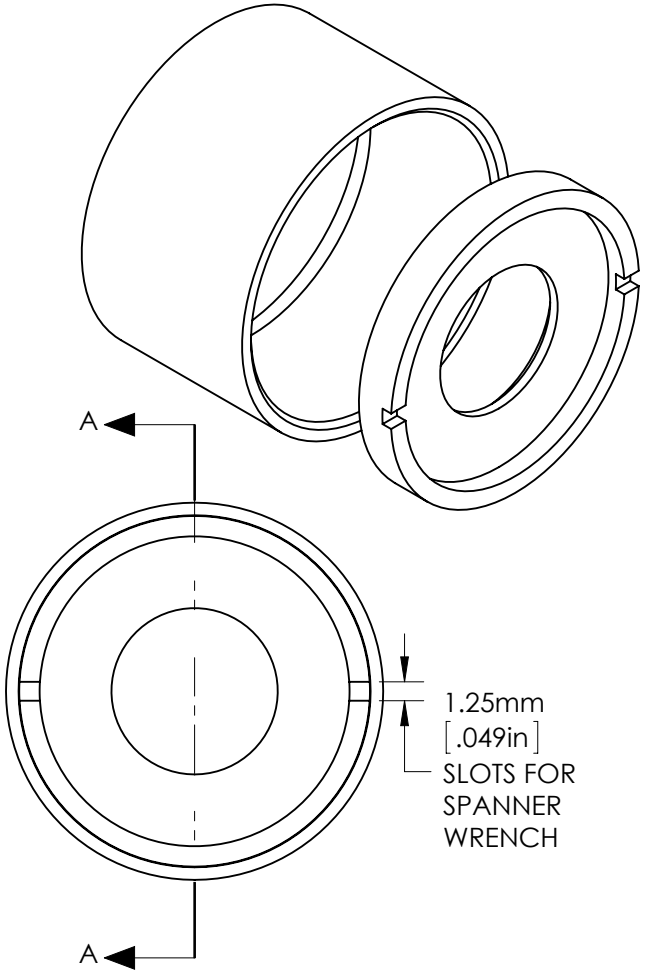

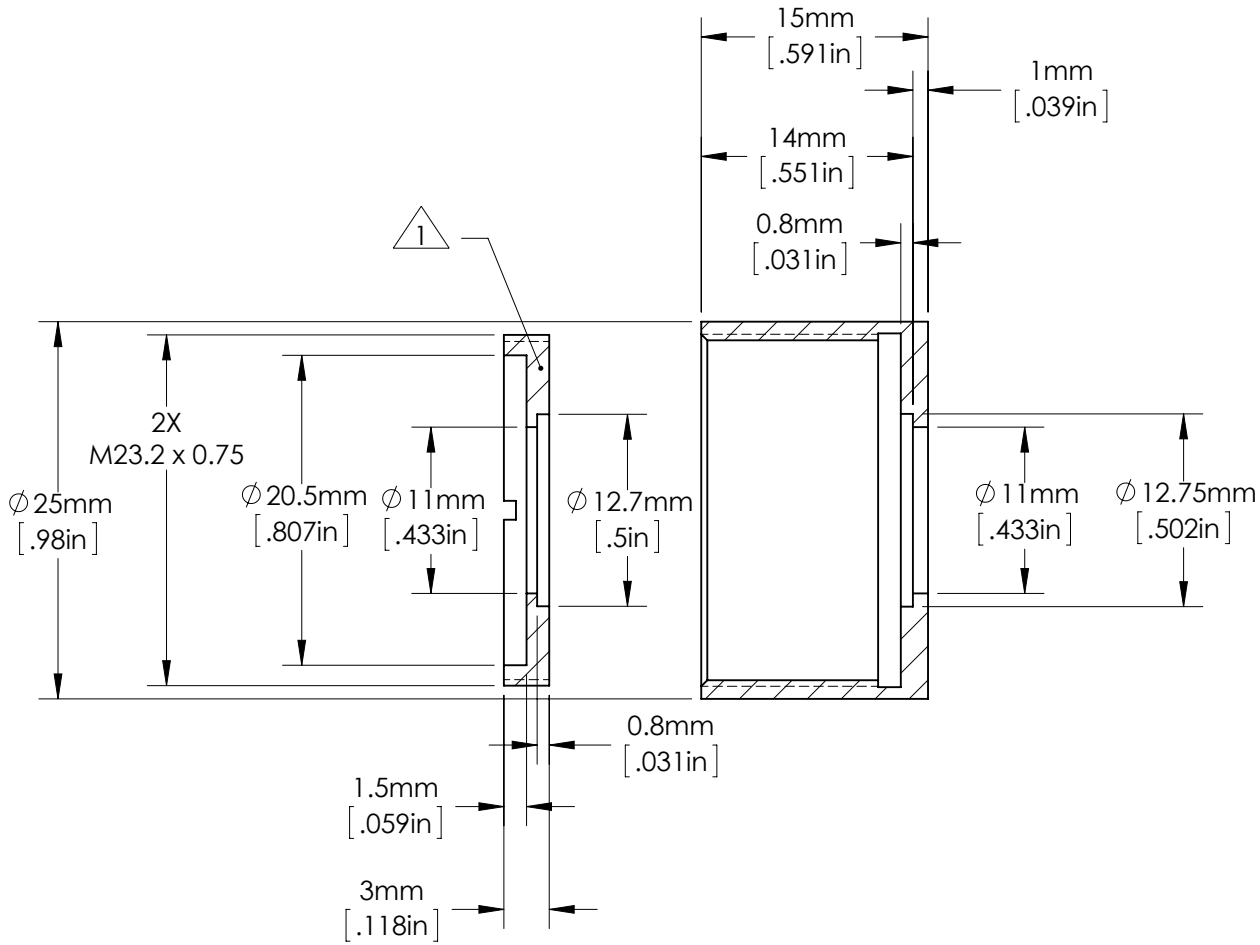

SECTION A-A

SPECIFICATIONS SUBJECT TO CHANGE WITHOUT NOTICE
DIMENSIONS ARE FOR REFERENCE ONLY
DIMENSIONS ARE IN mm [INCHES]

NOTES:

1. ADDITIONAL RETAINING RINGS CAN BE PURCHASED IN PAIRS AS SN 85560.

Edmund Optics®

TITLE	25mm Cage 12.7mm Diameter Thick Lens Mount					
DWG NO	85548	MATERIAL	BLACK ANODIZED ALUMINUM	SHEET 1 OF 1	REV	000